PARTNER sp. z o.o.

CERTIFIED PRODUCTS
EN 54-24:2008
CERTIFIED PRODUCTS

DK 20 PA OR

DK 20 PA OR is a modern efficient horn loudspeaker of oval shape. It has been designed for the processing of voice announcements or background music indoors or outdoors. It has a high protection class of IP 66 and is equipped at the back of the enclosure with a power tap regulator which is convenient for both the installer and the user. Power adjustment is possible in steps of 20/15/10/5 W. DK 20 PA OR is equipped with 100 V transformer.

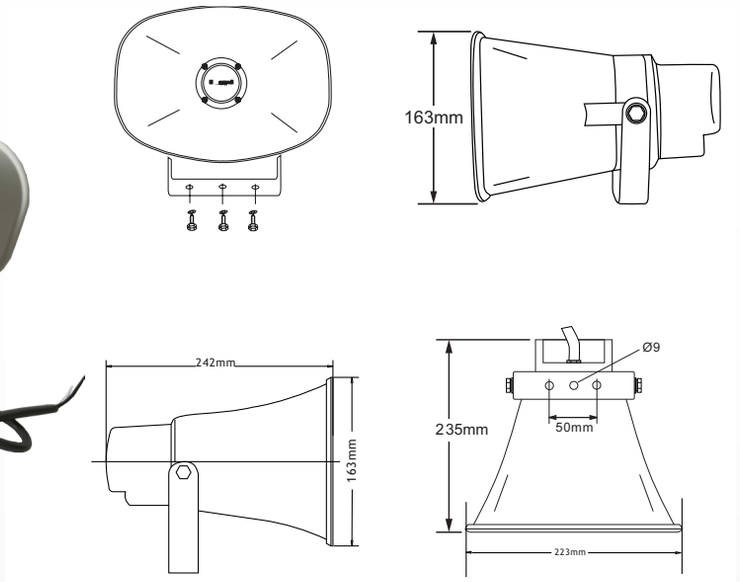

Specifications

Type	DK 20 PA OR
Power rate	20 W
Transformer	100V 20/15/10/5 W
Frequency Range (-10dB)	250-7000 Hz
SPL 1W/1 m, peak	106 dB
SPL Pmax/1 m, peak	117 dB
Dispersion -6dB, 1000 Hz	horizontal: 70° vertical: 100°
Connection	Cables, with rotate switch to select power
Dimensions	Ø223x242 mm
Weight	1,33 kg
Material	ABS, metal handle
Colour	White
IP Rating	IP 66
Packing Unit	12